RVMP flex POWER®

OWNER'S 2800i MANUAL

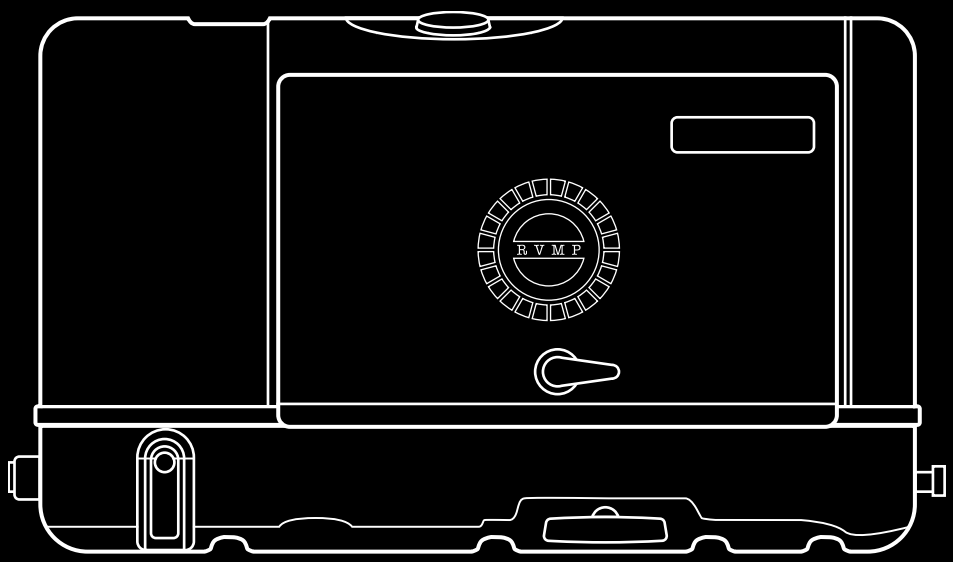

AUTHORIZED FOR INSTALLATION ONLY IN RECREATIONAL VEHICLES PREPPED BY THE RV MANUFACTURER WITH FUEL LINES AND A COMPARTMENT FOR PERMANENT GENERATOR INSTALLS.

DO **NOT** INSTALL IN ANY OTHER APPLICATION.

⚠ IMPORTANT

READ THIS MANUAL CAREFULLY BEFORE OPERATION.
THIS MANUAL INCLUDES IMPORTANT GUIDANCE FOR SAFETY OPERATION.

Visit rvmp.co • Copyright© 2024 RV Mobile Power, LLC. – All Rights Reserved.

TABLE OF CONTENTS

Introduction 4

Safety 4

General Guidelines 6

Model Identification 8

- Model Specifications 8
- Generator Components 11
  - Removing the Access Cover 11
  - Securing the Access Cover 11
  - Components 11
  - 2800i Generator Control Panel 12
  - Remote Operation Panel 13
- Operation 14
  - Breaking in a New Engine 14
  - Pre–Start Checks 14
  - Before Each Start 14
  - Starting the Generator 14
  - Resetting Overload 15
  - Stopping the Generator 16
  - Connecting to Utility Power 16
  - Loading the Generator 16
  - Altitude Adjustment 17
  - Operating in Cold Weather 18
  - Operating in Hot Weather 18
    - Hot Ambient Air 19
    - Ventilation 19
    - Compartment Door Vents 20
    - Hot Weather Operating Tips 20
    - Operating the Generator in a Motorized RV When Not Moving 21
    - Safe Temperature Operating Range 22
  - Operating in Dusty Environment 22
- Conducting General Inspections 22
  - Exhaust System 23
  - Fuel System 23

Battery System 23
Mechanical Systems 23
Checking Engine Oil Level 24
Troubleshooting 24
Maintenance 25
Resources and Tools Required 25
More Service Information 26
Maintenance Schedule 26
Fuel Recommendations 26
Gasoline 27
Propane (LP) 27
Engine Oil Recommendations 27
Starting Batteries 27
Exercising The Generator 28
Storing The Generator 28
If Running Gasoline in the Generator 28
If Running Propane (LP) Only in the Generator 29
Returning the Generator to Service 30
Cleaning the Air Filter Element 30
Changing the Engine Oil 31
Maintaining the Battery and Battery Connections 32
Replacing the Spark Plug 32
Cleaning the Spark Arrestor 33
Product Warranty Registration 34

FLEX POWER'S "THREE YEAR" LIMITED WARRANTY

Please visit or scan the links below for complete details on product registration and warranty.

Warranty details for Flex Power® 2800i:

https://warranty-2800i.rvmp.co

OWNER'S RESPONSIBILITY

To ensure trouble free warranty coverage it is important that you register your generator. You may register on-line at the links presented below or by filling out and returning to Flex Power the warranty registration card supplied with your generator. Registering your product confirms your warranty coverage and provides a direct link between you and Flex Power if we find it necessary to contact you. Please visit www.rvmp.co to complete your warranty registration information.

Warranty registration for each Flex Power® 2800i model:

https://warranty-gen-2800i.rvmp.co/

Your receipt of purchase including date, model, and serial number must be maintained and presented to a Flex Power Authorized Service Dealer for warranty service. Proof of purchase rests solely with you,the original purchaser.

Introduction

The RVMP® Flex Power® line of generators can power various RV appliances including AC motors, air conditioners, refrigerators, AC/DC converters and many other RV appliances. The load on the generator depends on the power rating. The generator will shut down or its circuit breaker(s) will trip if the sum of the loads exceeds the power limit of the generator.

For information on the assembly or individual components of this product, please visit: www.rvmp.co or email us at support@rvmp.co.

NOTE: Images used in this document are for reference only when assembling, installing and/or operating this product. Actual appearance of provided and/or purchased parts and assemblies may differ.

Safety

Read and understand all instructions before installing or operating this product. Adhere to all safety labels. This manual provides general instructions. Many variables can change the circumstances of the instructions, i.e., the degree of difficulty, operation and ability of the individual performing the instructions. This manual cannot begin to plot out instructions for every possibility, but provides the general instructions, as necessary, for effectively interfacing with the device, product or system. Failure to correctly follow the provided instructions may result in death, serious personal injury, severe product and/or property damage.

⚠ NOTICE

Keep multi-class ABC fire extinguishers handy. Class A fires involve ordinary combustible materials such as wood and cloth. Class B fires involve combustible and flammable liquid fuels and gaseous fuels. Class C fires involve live electrical equipment.

⚠WARNING

The "WARNING" symbol above is a sign that a procedure has a safety risk involved and may cause death or serious personal injury if not performed safely and within the parameters set forth in this manual.

⚠WARNING

Failure to follow instructions provided in this manual may result in death, serious personal injury and/or severe product and property damage, including voiding of the warranty.

⚠WARNING

Do not operate equipment when mentally or physically fatigued or after consuming alcohol or drugs.

⚠WARNING

Do not use starting fluids which can cause an explosion and may result in death, serious personal injury and/or severe product and property damage.

⚠WARNING

Installing or maintaining a generator can cause severe personal injury when not done correctly. Wear personal protective equipment including safety glasses, hard hats, steel-toed shoes and protective clothing when working on equipment.

⚠WARNING

Benzene, found in some fuels, and used engine oils have been identified by some state and federal authorities to cause cancer or reproductive toxicity. Do not ingest, breathe fumes or come into contact with gas or oil when checking, draining or adding gas and oil.

⚠WARNING

Hot, moving and electrically-live parts can result in death, serious personal injury and/or severe product and property damage. Only trained and experienced personnel should make adjustments while the generator is running.

⚠WARNING

Moving parts can catch on loose clothing items or jewelry. Do not wear loose clothing or jewelry near moving parts including shafts, fans, belts and pulleys. Keep hands away from moving parts. Keep protective guards in place over fans, belts, pulleys and other moving parts.

⚠WARNING

Improperly installed electrical connections may result in death, serious personal injury and/ or severe product and property damage. Electrical connections must be made by trained and experienced electricians in accordance with applicable NEC or other codes.

⚠WARNING

Back-feeding to shore power may result in death, serious personal injury and/or severe product and property damage. The generator must not be connected to shore power or any other source of electrical power, or any RV with shore power capability, unless an approved switching device is used to prevent interconnections.

⚠WARNING

Do not use evaporative starting fluids. They are highly explosive and dangerous.

⚠WARNING

Operating, servicing, and maintaining this equipment can expose you to chemicals, including engine exhaust, carbon monoxide, phthalates, and lead, which are known to the State of California to cause cancer and birth defects or other reproductive harm. To minimize exposure, avoid breathing exhaust, do not idle the engine except as necessary, service your equipment in a well-ventilated area and wear gloves or wash your hands frequently when servicing your equipment. For more information go to www.P65Warnings.ca.gov.

⚠CAUTION

The "CAUTION" symbol above is a sign that a procedure has a safety risk involved and may cause personal injury, product or property damage if not performed safely and within parameters set forth in this manual.

⚠CAUTION

Always wear eye protection when performing service, maintenance or installation procedures.Other safety equipment to consider would be hearing protection, gloves and possibly a full face shield, depending on the nature of the task.

General Guidelines

- Keep children away from the generator.
- To prevent accidental or remote starting while working on the generator, disconnect the negative (–) battery cable at the battery.
- Keep the generator and its compartment clean. Excess oil and oily rags can catch fire. Dirt and gear stowed in the compartment can restrict cooling air.
- Make sure all installed fasteners have been secured and torqued properly.
- Do not work on the generator when mentally or physically fatigued or after consuming alcohol or drugs.
- Used engine oil has been identified by some state and federal agencies as causing cancer or reproductive toxicity. Do not ingest, inhale or allow bare skin to come into contact with used oil or its vapors.
- Benzene and lead in some gasoline mixtures have been identified by some state and federal agencies as causing cancer or reproductive toxicity. Do not ingest, inhale or allow bare skin to come into contact with gasoline or its vapors.
- Keep multi-class ABC fire extinguishers handy. Class A fires involve ordinary combustible materials such as wood and cloth; Class B fires involve combustible and flammable liquid fuels and gaseous fuels; Class C fires involve live electrical equipment.
- Installation and operation of the generator must comply with all applicable local, state and federal codes and regulations.

The Exhaust Produced By The Generator Is Deadly

⚠WARNING

Substances in combustion exhaust gasses have been identified by some state and federal agencies to cause cancer or reproductive toxicity. Do not breathe in or come into contact with exhaust gasses.

⚠WARNING

Carbon monoxide is produced as part of the combustion process and is a poisonous gas. Inhalation of this gas can cause serious personal injury or death. Make sure carbon monoxide is not being inhaled by occupants of the vehicle as well as others working on or around the generator.

1. Learn the symptoms of carbon monoxide poisoning. Carbon monoxide is colorless, odorless, tasteless and non-irritating. It cannot be seen or smelled. Exposure to even low levels of carbon monoxide for a prolonged

period can lead to asphyxiation. Mild effects of carbon monoxide poisoning include headache, dizziness, drowsiness, fatigue, chest pain and confusion. More extreme symptoms include vomiting, seizure and loss of consciousness.

2. Never sleep in the vehicle while the generator is running unless the vehicle is equipped with a working carbon monoxide detector.
3. Make sure there is ample fresh air when operating the generator in a confined area.
4. Disable any automatic starting feature of an inverter-charger or other automatic starting device before storing the vehicle or parking it in a garage or other confined space.
5. The exhaust system must be installed in accordance with the Flex Power Generator Installation Manual. (available here: https://rvmp.co/manuals).
6. Engine cooling air must not be used for heating the working or living space or compartment.

Gasoline And Propane Are Flammable And Explosive

⚠WARNING

Fuel and fuel vapor are highly explosive. Do not smoke or turn electrical switches on or off where fuel fumes are present or in areas sharing ventilation with fuel tanks or equipment. Keep flame, sparks, pilot lights, arc-producing equipment and all other sources of ignition well away from fuel lines and fuel sources. Fuel lines must be secured, free of leaks and separated and/or shielded from electrical wiring.

- Fuel leaks can lead to explosive accumulations of gas or vapor.
- LP sinks when released and can accumulate inside housings, basements and other below-grade spaces.

Generator AC Output Voltage Is Dangerous

⚠WARNING

The generator must not be connected to shore power or to any other source of electrical power without the use of an approved transfer switch. Connecting the generator to utility power during a power outage can cause electric shock, resulting in severe personal injury or death, as well as damage to equipment.

- Disable any automatic starting feature of an inverter-charger or other automatic starting device before servicing the generator.
- Generator electrical output connections must be made by a trained and experienced electrician and in accordance with applicable codes.
- Use caution when working on live electrical equipment. Remove jewelry, make sure clothing and shoes are dry, stand on a dry wooden platform or rubber insulating mat and use tools with insulated handles.

Gas Emitted From Batteries Is Explosive

⚠WARNING

Battery gas is highly explosive and may result in death, serious personal injury and/or severe product and property damage. Battery compartments must be adequately ventilated per RVIA guidelines (see RVIA/NFPA

1192 Section 2-3). Wear appropriate personal protective equipment when working on the battery and do not smoke around the battery. Disconnect the negative battery cable first and reconnect it last.

- Wear safety glasses.
- Do not smoke.
- To reduce arcing when disconnecting or reconnecting battery cables, always disconnect the negative (-) battery cable first and reconnect it last.

Moving Parts Can Cause Injury

⚠WARNING

Hot, moving, and electrically-live parts can result in death, serious personal injury and/or severe product and property damage. Make sure protective guards are in place, use trained personnel to make adjustments and do not wear loose clothing near moving parts.

- Make sure all protective guards are property installed before starting the generator.
- Use only trained personnel to make adjustments to the generator while it is running.
- Moving parts can catch loose items, such as clothing or jewelry. Do not wear loose clothing or jewelry near moving parts such as power take-off shafts, fans, belts and pulleys.
- Moving parts can entangle appendages, including fingers. Keep the protective guards in place over the fans, belts, pulleys and other moving parts and keep hands away from all moving parts.

Model Identification

A nameplate containing the model and serial number of the generator is affixed to the front of the generator. This information is necessary when contacting RVMP for parts, service and product information. Contact RVMP at support@rvmp.co or through www.rvmp.co.

Model Specifications

Model	2800i
Generator Specs	Multi-pole permanent magnet field, self-excited, 1-phase digital sine wave, air cooled
Power (Watts)	2800 / 2500 (LP)
Frequency	60 Hz
Volts	117 – 120
Amps	23.3 / 20.8 (LP)
Engine Specs	1 cylinder, 4-cycle, spark ignited, OHV, air-cooled
Bore	2.83 in (72 mm)

Stroke	2.16 in (55 mm)
Displacement	13.73 in^3 (224 cc)
Compression Ratio	9.25:1
Oil Capacity	0.83qt. (0.78 liters)
Intake Valve Lash	0.0039 in – 0.0059 in (0.1 mm –0.15 mm)
Exhaust Valve Lash	0.0039 in – 0.0059 in (0.1 mm –0.15 mm)
Spark Plug Gap	0.016 in – 0.024 in (0.4 mm –0.6 mm)
Ignition Timing	/
Governor	Digital
Choke	Automatic Digital
Lubrication	Splash
Emergency Start	Recoil Start Available
RPM	Variable 2600–3200
DC System Specs	
Battery Voltage	12 V
Minimum Battery Rating	450 CCA @ 0°F (–18°C)
Battery Cable Gauge Size	6 AWG @ 30ft
AC System Specs	
Design	Multi Pole PM
AC Excitation	Brushless PM
DC Excitation	Brushless PM
Voltage Regulation	PWM
Voltage Regulation	117 – 120 Volts
Frequency Regulation	59 – 61 Hz
Total Harmonic Distortion	≤3%

Ambient Temperature Rating	40℃
Neutral	Bonded
Installation Specs	
Exhaust OD	1.1 in (28 mm)
Minimum Cooling Air Inlet Area	16.9in^2 (109cm^2)
Unit Dimensions (LxWxH)	22 X 16.9 X 13.4 in
Muffler Outlet Collar OD	1.13 in (28.7 mm)
Weight (with engine oil)	113 lbs
Minimum Compartment Size	24 x 18.9 x 13.9 in (610mm x 480 mm x 353 mm)Above floor applications
Gasoline Specs	
No Load Consumption Rate	0.12 G/hr*
Half Load Consumption Rate	0.30 G/hr*
Full Load Consumption Rate	0.60 G/hr*
Fuel Connection	1/4 inch barb fitting for gasoline hoses
Propane Specs	
No Load Consumption Rate	.79 lbs/h*
Half Load Consumption Rate	2.2 lbs/h*
Full Load Consumption Rate	3.3 lbs/h*
Fuel Connection	3/8in – 16 UNF–2A, SAE 45° 1/2in flare fitting
LP Vapor Supply Pressure	9–13 inWC(228–330 mmWC) (2.25–3.25kPa) 0.33–0.5 PSI

Generator Components

⚠WARNING

Operating the generator with the access cover off can lead to severe burns and engine damage due to overheating. Always secure the cover after starting the generator.

Removing the Access Cover

Turn the cover latch counter clockwise to the 'open' position and pull the top of the cover outward. See Figure 1 below.

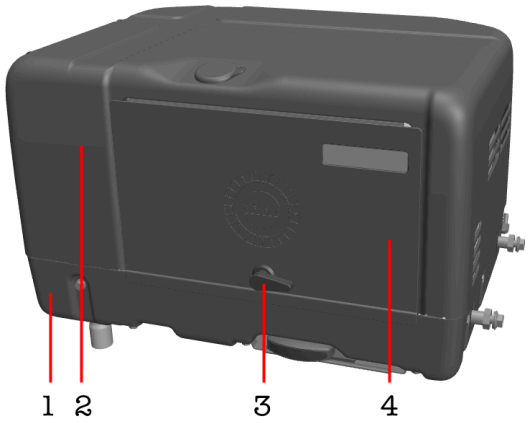

Fig. 1

1 – Bottom Pan
2 – Main Housing Cover
3 – Latch
4 – Control Panel Access Cover

Securing the Access Cover

Position the bottom of the access cover so that its lip catches the top edge of the pan. Rotate the top of the cover toward the generator and turn the cover latch clockwise to the closed position, while making sure the latch catches with the cover and is secure.

Components

The basic components of the generator are visible with the main housing cover off (shown in Figs. 2A–2B below). Note specifically the location of the gasoline/LP selector **7** which allows the user to select the type of fuel to be burned in the engine. Also be sure to note the location of the oil dipstick **3** and check this oil level regularly. Your generator may have been shipped without oil, so **NEVER start a new generator without checking the oil level.**

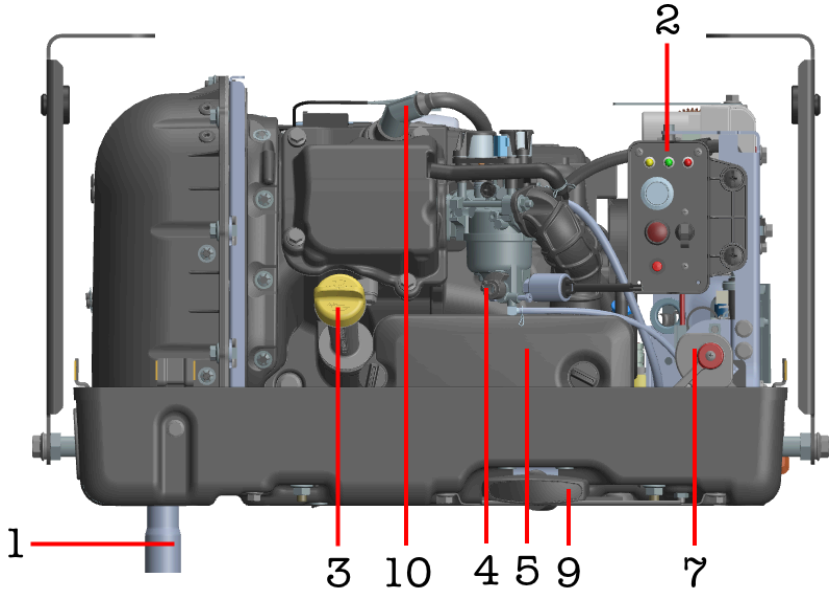

Fig. 2A

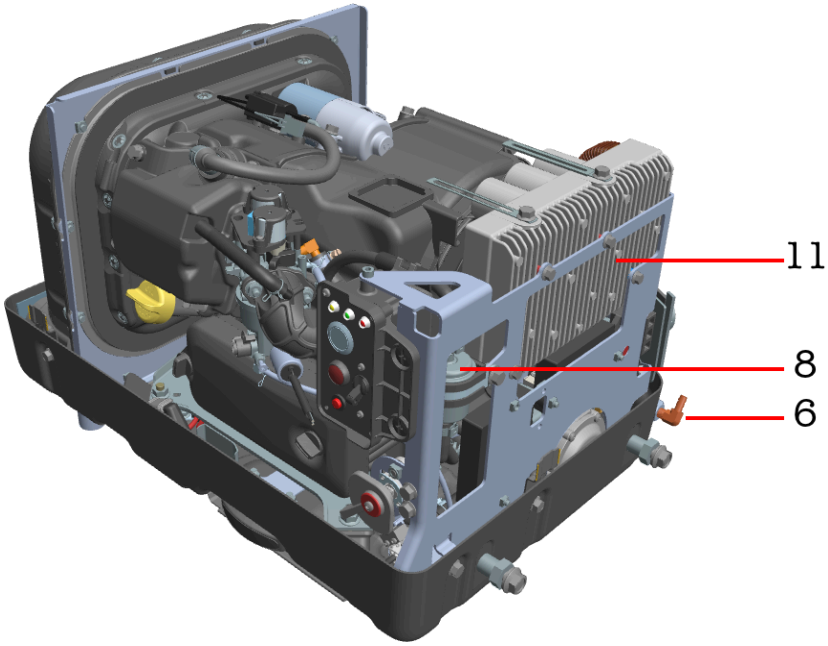

Fig. 2A

1 – Muffler
2 – Control Panel
3 – Oil Dip Stick
4 – Altitude Adjustment Knob
5 – Air Filter
6 – Gasoline Pump
7 – Fuel Type Selection Switch
8 – Gasoline Filter
9 – Pull Start Handle
10 – Spark Plug Cap
11 – Inverter

2800i Generator Control Panel

The control panel for the 2800i model (Fig. 3A) is located behind the maintenance access cover and has the following features.

1. Push Button Start – Push and hold for 1 to 2 seconds to automatically start the engine and push again to stop.
2. Status indicator lights.
    a. Low Oil LED – This light indicates a low oil level and will not allow the engine to start or run.

b. Overload LED – This light indicates a general system electrical overload, temperature protection, output short circuit, or any other abnormal conditions.
c. Output Ready – This light indicates the generator is ready to use.

3. ON/OFF 24 Amp AC Output Circuit Breaker – Allows the generator to automatically disconnect when overloaded to protect the generator and the appliance(s). Be sure to place the circuit breaker into the 'ON' position once the generator has successfully started.
4. Reset Button – If the generator is overloaded, the inverter will disconnect at the AC overload breaker. The engine will continue to run, but there will be no electrical output. Reduce the electrical loads, then push the reset button, and then turn the breaker back to 'ON.'
5. Gasoline Primer Button – Press and hold the primer button to actuate the gasoline pump to bring fuel from the fuel tank to the generator engine. This is typically only needed the first time the generator is operated or after returning the generator to operation after being disconnected from the RV.

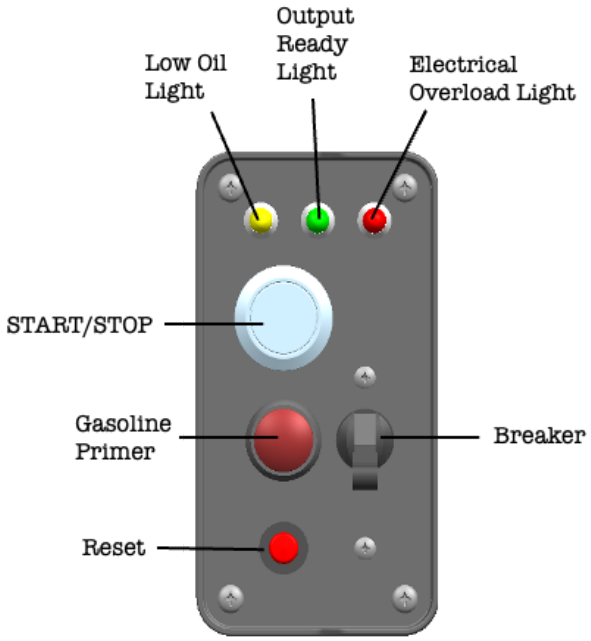

Fig. 3A

Remote Operation Panel

Most RVs that are equipped by the original equipment manufacturer to accept an installed generator also include a secondary operation control panel (often located within the RV living space) to operate the generator. The panel is equipped with the ability to start and stop the generator, prime the gasoline and read the VFT meter functions. The Install Manual shows the pin out for the wire harness exiting the generator and explains how to connect the generator to a remote panel. (available here: https://rvmp.co/manuals). If your RV does not have a remote operation control panel, you can purchase one from RVMP at www.rvmp.co. Once properly installed:

1. Press START/STOP to remotely start the generator and stop the generator.
2. Press PRIME to prime the gasoline.
3. (other features may be available depending on the remote control being used)

Operation

Breaking in a New Engine

Proper engine break-in on a new generator is essential for top engine performance and acceptable oil consumption. Run the generator with no load for 30 minutes, then run the generator at approximately ½ power for the first two hours of operation, and ¾ power for two more hours. See electrical loading details below for the generator to determine proper electrical loads. Proper engine oil and oil level are especially critical during the break-in period. Change the engine oil if operation in hot or cold temperatures as needed (see engine oil recommendations). Check the oil level twice a day or every four hours during the first 25 hours of break-in, then change the engine oil after the first 25 hours (see changing the engine oil).

Pre-Start Checks

Before the first start of the day and after every eight hours of generator operation, inspect the generator as instructed under (conducting general inspections). Keep a running log of maintenance and the hours of operation and perform maintenance that may be due. See (returning the generator to service) if the RV has been in storage.

Before Each Start

1. Verify that the correct fuel source is selected.
2. If turning the fuel switch to gasoline, make sure there is gasoline in the fuel tank.
3. If turning the fuel switch to LP, make sure the LP hose is safely secured from the generator to the LP tank. Fully open the LP tank valve.
4. Make sure all vehicle carbon monoxide (CO) detectors are working.
5. Check for signs of fuel and exhaust leaks and for damage to the exhaust system.
6. Turn off the air conditioner and other large amp draw appliances.
7. Make sure the engine is filled with oil to the proper level.
8. Make sure the AC breaker(s) on the control panel are in the OFF position when starting the generator for the first time.

Starting the Generator

When gasoline is selected: If the generator is brand new, was recently serviced, or previously ran out of gasoline, prime the gasoline fuel system by pressing and holding the primer button on the control panel until all air bubbles have been purged out of the fuel hoses (this should only take a few seconds, do not prime for longer than this or you could flood the engine).

When propane is selected, there is no need to press the primer button. The primer button is disconnected when operating on LP fuel, which does not require priming.

NOTE: The generator can be started from either the remote panel or directly at the front panel of the generator.

A. Push and hold the start button for 3 seconds then release, the generator will begin an automated starting routine.
B. The generator will stop cranking after a predetermined time. If the generator hasn't successfully started, it will likely make one or two more attempts to restart, without the need to press the start button again.

C. Press and hold the start button again for 3 seconds to re-start the automated routine.
D. Pull the recoil handle if the battery voltage is low and the engine will not turn over from the battery.
E. Switch the AC breaker(s) on the front panel to ON to send power to appliances. For top performance and engine life, especially in colder weather, let the engine warm up before switching on the AC breaker(s) on the front panel.

⚠WARNING

Operating the generator with the access door off can lead to severe burns. Always secure the access door after starting the generator.

⚠WARNING

Exhaust gases contain carbon monoxide (CO), an odorless colorless gas. Carbon monoxide poisoning can cause unconsciousness and death. Symptoms of carbon monoxide poisoning include: dizziness, muscular twitching, weakness, sleepiness, throbbing in the temples, headache, inability to think clearly, nausea and vomiting. If you or anyone experiences any of these symptoms move quickly to clean air outside of the RV. If symptoms persist, seek medical attention immediately. Shut down the generator and do not operate it until it has been inspected or repaired.

⚠WARNING

Never sleep in the RV with the generator running unless the RV is equipped with a working carbon monoxide detector. Primary prevention method against inhaling carbon monoxide is proper installation of the exhaust system and daily inspections for visible and or audible exhaust leaks.

1. Check for fuel and exhaust leaks. Stop the generator immediately if there is a fuel or exhaust leak and have it repaired before continued operation.
2. See Trouble Shooting section below if the engine shuts down and any of the LEDs are blinking.
3. Secure the access door after starting the generator.

⚠WARNING

Short circuits in electrical appliances and tools can cause fire and electrical shock leading to severe personal injury and or death. Read and follow the equipment and tool manufacturer's instructions and warnings regarding safe use, maintenance and proper grounding.

Resetting Overload

An electrical overload or a short circuit will trip the over-current protection system by disconnecting the generator's AC output at the AC circuit breaker(s) even though the generator engine continues to run. If this occurs, the OVERLOAD LED light on the generator control panel will be illuminated and the OUTPUT READY light will be off.

To restore the generator AC output, use the following procedure:

1. Turn off all electrical appliances.

2. Press the red RESET button on the generator control panel until the OVERLOAD alarm light goes off and the OUTPUT READY light is on.
3. Check that the electrical starting and running loads do not exceed the generator's ampacity or have a licensed electrical/technician correct any fault causing a short circuit in the electrical wiring.
4. Turn on electrical loads as needed.

Stopping the Generator

During normal operation, use the following steps to stop the generator:

1. Press and hold the START button on the generator control panel or the remote panel for 1–3 seconds. The engine will automatically stop.

Connecting to Utility Power

⚠WARNING

Connecting the generator to a public utility (or any other power supply) can lead to electrocution of personnel working on the utility lines, damage to equipment and fire. An approved switching device or transfer switch must be used to prevent a dangerous connection.

When the RV has provisions for connecting to utility power (shore power), such as a cord for plugging into a power receptacle at a campground, it must also have an approved switching/transfer device to keep the generator and utility from being simultaneously connected.

Loading the Generator

The generator can power AC motors, air conditioners, AC/DC converters, charge batteries, and other appliances. The total appliance load that can be powered depends upon the generator's rated power for each model. The generator will disconnect AC output power at the AC breaker(s) on the front panel of the generator if the total sum of the loads exceeds the generator's rating.

To avoid overloading the generator and causing shutdowns, compare the sum of the RUNNING loads of the appliances that are likely to be used at one time to the power rating of the generator. Use Fig. 4 below or the ratings of the appliances to obtain the individual appliance loads. It may be necessary to run fewer appliances at the same time. The sum of the appliance loads must not exceed the rating of the generator.

Electric equipment		Rated power(W)	Starting power(W)
Home appliance	Flat screen TV 27"	80	100
	Low-energy light	5-50	5-50
	Electric cooker	1000	1000
	Computer	250	250
	Electric fan	50	100
	Washing machine	250	500
	Refrigerator	50	300
	Air-conditioner	1600	3200
Tools	Electric hammer	1000	1500

Fig. 4

When a large motor or air-conditioning unit is started, the generator may shut down due to overload even though the running power of the air-conditioning unit is less than the rated power of the generator. This difference between the starting power and the rated power is due to the instantaneous amperage draw of the air-conditioning unit when starting up and typically only lasts for a short duration. If the generator does shut down, allow 5 minutes to elapse before attempting to reconnect the generator to any loads or the RV fuse panel. This is because the air-conditioning unit needs time to equalize the pressure inside the air-conditioning unit and failure to wait adequate time is called "short-cycling."

It is also important to note that air density decreases as ambient temperature and elevation increases, which causes the generator's output to decrease. Generator power decreases approximately 3.5% of rated power for each 1000 feet above sea level. It may be necessary to operate fewer appliances at higher elevations and increased temperatures.

Altitude Adjustment

As noted above, the generator performance will decrease at high elevations due to the reduced amount of oxygen available for combustion in the engine. To account for this, the carburetor contains an adjustment to improve performance at high altitudes. The generator comes from the factory with the altitude adjustment set for sea level.

1. To adjust the carburetor for high altitude operation, use road maps, GPS and road signs to determine the local elevation.
2. Locate the high altitude adjustment knob (Fig. 6) located on the carburetor bowl, it is located behind the air cleaner cover.
3. Rotate the knob (you may need a small tool to make the adjustment) to the local elevation.
4. Upon leaving high local elevation be sure to return the adjustment to lower elevations.

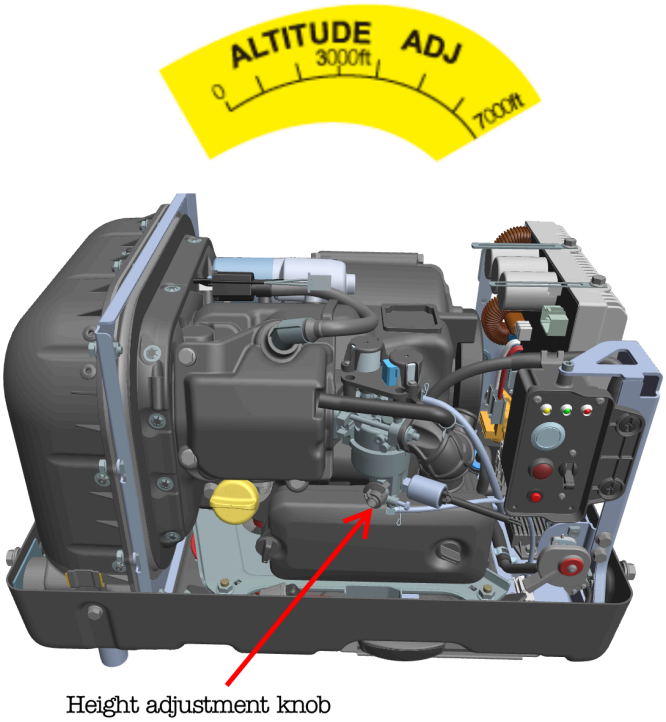

Fig. 6

⚠CAUTION

Operating the generator at low altitudes with a high altitude setting can cause power loss, poor starting, overheating and engine damage. Always reset the high altitude adjustment when returning to lower altitudes.

Operating in Cold Weather

Pay particular attention to the following when operating the generator in cold weather.

1. Make sure the engine oil viscosity is appropriate for the ambient temperatures. Change the oil if there is a sudden drop in temperature. See Engine Oil Recommendations.
2. Perform spark plug maintenance. See Spark Plug Maintenance.
3. Perform starting battery maintenance. See Battery Maintenance.

Operating in Hot Weather

Generators, similar to any engine system, need cool air while running. Flex Power generators are designed to manage airflow across all components to maintain a cool running temperature. Many factors go into the design of a generator to ensure proper airflow. Components like the enclosure, service door placement, base pan geometry, and blower wheel design play large roles in ensuring proper ventilation inside the generator.

Generator sets must be well ventilated to ensure proper operation. A well-designed ventilation path will:

- Provide combustion air that meets generator inlet air parameters

- Remove heat dissipated by the alternator and engine
- Limit recirculation of hot exhaust gases into the inlet air stream

While the generator has been optimized for cooling internally, there is one key factor that cannot be controlled: the environment. Where the generator lives can play a big role in how the generator's cooling system performs. This environment includes both the immediate vicinity of the RV, as well as external factors.

RVMP or Flex Power cannot control where the RV goes or how the generator is used. There are many local environmental effects that can affect the cooling performance of the generator, some of which the user can control, and some they cannot.

Hot Ambient Air

Generally speaking, a generator's rated power output will decrease as the ambient temperatures increase. As a general rule of thumb, a user can expect approximately 1% decrease in power for every 5.5^{0}C (10°F) above 25^{0}C (77^{0}F). It is important for the user to recognize these limitations and the environmental challenges that the generator may have with cooling.

Ventilation

If the generator is not properly ventilated, it may overheat and affect its performance. Long periods of overheating may cause the generator to shut down and may ultimately damage the equipment. The generator draws cooling air from the top and sides of the unit while expelling hot air out of the bottom, see Fig. 7 below.

Fig. 7

However, the cool air intake and hot air discharge have potential to recirculate hot air. Lack of intended paths for airflow, positioning of the generator, compartment spacing around the generator, and long skirting can cause hot exhaust to be ingested into the intake of the generator, an effect known as "hot air recirculation." Hot air recirculation must be considered in each case, and a conscious effort in installation design must be given to avoid it.

A possible design methodology is to use a door vent to allow for dedicated cooling air inlet to the generator. Door vents can sometimes be an effective option to separate inlet and outlet ventilation air in generator installations positioned in

compartments or in hang-down kits below the floor of a coach. They can also be effective for generators with a bottom air inlet that is ducted to the side of the coach. These vents consist of a cutout in the door of the generator compartment to allow airflow through it into the inlet of the generator.

There are many design considerations that must be taken into account with a generator installation utilizing a door vent. An intended and dedicated path for airflow should be provided for the ventilation air into and out of the generator. Any louver, grill, or other metal perforations within this path for airflow should have enough effective open area, and be properly located, to allow for sufficient airflow without creating restriction.

Additional sealing of generator cutouts, mounting structures floors, and the area around the generator with any gaps or edges, may be required to ensure heated air does not enter the inlet area of the generator. As with every unique installation of a generator, it is recommended that a representative installation utilizing the intended door vent for the generator set be tested to determine that the generator set will not overheat due to recirculation of hot air back into the generator set.

Compartment Door Vents

Generator compartment door vents can sometimes be an effective option to separate inlet and outlet ventilation air in generator installations installed in compartments or in hang-down kits below the floor of a coach. These vents consist of a cutout in the door of the generator compartment to allow airflow through it into the inlet of the generator. Often, to protect the inlet of the generator and for cosmetic reasons, louvers, metal perforations, or screens are used in the open space on the door. Louvers and screens over air inlet and outlet openings restrict airflow and vary widely in performance. A louver assembly with narrow vanes, for example, tends to be more restrictive than one with wide vanes.

The percent of effective open area of a vent covering must be considered when using it over a generator inlet area. The percent of effective open area is often specified by the louver, grill, perforation, or screen manufacturer, or can otherwise be calculated. The inlet area provided for the generator must at a minimum be oversized such that the vent, grill, louver or perforation has an effective open area equal to that of the minimum generator free-air inlet area, with additional area provided if the air must take a long or treacherous path to the generator inlet.

The use of a door vent provides a dedicated path of cool exterior air to the inlet of the generator. A dedicated duct leading from the door vent of the compartment to the inlet area of the generator may be required. Weather stripping may be needed to ensure that the air into the generator originates from outside the compartment, and does not leak around gaps or edges. Additionally, holes or openings in the floor of the compartment, or at the base of the generator, can provide a path for heated air to enter the compartment. A sealed floor consisting of sheet metal may be needed to mount the generator on instead of on top of an open framework.

Hot Weather Operating Tips

Pay particular attention to the following when operating the generator in hot weather.

1. Pay attention to the generator airflow direction, and avoid impeding it - airflow can be greatly hindered by curbs and hills. Watch how close the generator is to the ground, and avoid placing camping equipment such as coolers or chairs under the generator.

2. Pay attention while leveling the RV as well, as sometimes this can cause it to be pushed closer to the ground or near something, blocking airflow.

3. Watch what is next to the RV as well; parking next to a wall or leaning something along the side of the RV can block necessary ventilation under the chassis of the RV, and prevent hot air from escaping.

4. Monitor how much dirt and debris the generator is kicking up while running. Picking up debris can block necessary cooling areas for the generator, in addition to clogging the air filter.

5. Wind direction can affect hot air from escaping the generator area. Orient the RV (when possible) to ensure that hot air is removed and cool air is continuously supplied.

6. Make sure the engine oil viscosity is appropriate for the ambient temperature. See Engine Oil Recommendations.

7. Keep the generator clean.

8. Perform scheduled maintenance as recommended. See Periodic Maintenance.

It is important to do what you can to minimize all of these concerns, and re-park the RV if necessary. Remember that the generator needs space to breathe, and give it what you can to make sure this happens.

Operating the Generator in a Motorized RV When Not Moving

In some applications, the generator may be mounted within a motorized RV which contains a motor for general propulsion, and would include its own catalytic converter and exhaust system which can produce substantial heat. When the RV is in motion, this is usually not an issue as the movement of air across the RV will ensure that hot air from the RV motor and its exhaust can be removed from the area. However, in some situations the RV may remain stationary even though the RV motor is continuing to run (along with the generator). These are special situations and typically only occur for a few minutes, but they do occur, and when this happens there may be hot air from the RV motor and exhaust trapped under the RV.

If the RV vehicle motor continues to run even though the RV is not moving, the door for the generator compartment can be opened to allow additional cooling air into the generator compartment to cool the generator. If this is done, the compartment door MUST be closed before the RV is moved in any fashion. NEVER remove the service door of the generator itself when experiencing overheating as this will only make the overheating worse.

Some events, such as a bad gust of wind, generator overload condition, or other event can cause a generator to experience a hot situation and shut down suddenly due to overheating. This can happen from time to time and is not an immediate cause for concern. The generator is designed to survive such situations, and likely no damage will occur if it does. In this situation, however, immediately trying to start the generator may not work, it may need time to reset or cool adequately before restarting.

Generally speaking, it is not recommended to run the RV vehicle motor and the generator while the RV remains stationary for long periods of time. As mentioned above, the RV vehicle motor and exhaust will build up hot air beneath the RV that will continuously be drawn into the generator compartment. If this is done for a long period of time, there

must be adequate wind to remove the hot air from beneath the RV, or as mentioned above, simply open the generator compartment door for additional cooling while the RV is not moving.

Safe Temperature Operating Range

When running the generator on propane, do not run the generator in ambient temperatures lower than −18°C (−0.4°F) or higher than 49°C (120°F). When running the generator on gasoline, do not run the generator in ambient temperatures lower than −29°C (−20.2°F) or higher than 49°C (120°F).

The generator is designed to shut down when high ambient temperatures are experienced. This is to prevent damage to the generator and increase its lifetime. Once temperatures within the range below are experienced for a predetermined amount of time, the generator will automatically shut down and will need adequate time to cool before it can be restarted. The generator can be re-started once safely within the restart temperature range.

Shut Down Temperature Range: 116.5°C – 123.5°C (241.7°F – 254.3°F)

Re-Start Temperature Range: 104.5°C – 113.5°C (220.1°F – 236.3°F)

Note: If your generator is shutting down due to high temperatures you must consider the environment that you are putting the generator in and review all paths for cooling air as outlined above. The shut-down temperature is set very high for normal operating environments, but in some cases these high temps may be reached (especially when idling a motorized RV without actually moving the RV, which will apply high amounts of heat to the generator and prevent it from being able to cool itself). Limit the time a motorized RV is idling while running the generator, or open the generator compartment door, or take other airflow measures.

Operating in Dusty Environment

Pay particular attention to the following items when operating the generator in dusty environments.

1. Do not let dirt and debris from accumulating inside the generator compartment. Keep the generator clean.
2. Perform air cleaner maintenance more often.
3. Change the engine oil more often.
4. Containers of engine oil that have been opened should be sealed tightly to keep out dust.

Conducting General Inspections

Inspect the generator before the first start of the season and after every eight (8) hours of operation.

⚠WARNING

Exhaust gas is deadly. Do not operate the generator if there is an exhaust leak or any danger of exhaust gases entering or being drawn into the RV.

⚠WARNING

Do not park the RV in high grass or brush or any combustible materials that could cause a fire.

Exhaust System

1. Make sure there is no debris blocking the exhaust tail pipe. If the RV has been stored for the winter, remove the plug from the tail pipe. Look and listen for exhaust system leaks while operating the generator while it is running. Shut the generator down if an exhaust leak has been found and have it repaired before continued operation.

2. Look for openings or holes between the generator and the living compartment or vehicle cab, where exhaust gases could enter or if the generator sounds louder than usual, indicating a hole in an exhaust tube that would allow gases to enter. Have an experienced service technician permanently close any holes or other breaches. Replace dented or rusted exhaust components and make sure the tail pipe extends at least 1" beyond the perimeter of the RV. See NFPA 1192 (Section 6.4.3–6.4.6) as well as the Installation Manual for additional guidance on proper exhaust routing and support.

3. Park the RV so the generator exhaust gases can disperse away from the RV. Barriers such as walls, snow banks, high grasses and brush and other vehicles in close proximity can cause exhaust gases to accumulate in and around the RV. Do not operate power ventilators or exhaust fans while the vehicle is standing with the generator running. The ventilator or fan can draw exhaust gases into the vehicle.

⚠WARNING

Gasoline and LP are highly flammable and explosive and can cause severe personal injury or death. Shut down the generator and repair leaks immediately.

Fuel System

Check for fuel leaks at the hose, tube and pipe fittings while the generator is running and when it is stopped. Do not use a flame to check for fuel leaks. Check flexible fuel hoses for cuts and abrasions. Make sure the fuel hoses are not rubbing against other parts. Have a service technician replace worn or damaged fuel line components before leaks occur.

If you smell the rotten eggs smell or LP, close the shut off valve on the LP tank immediately and have the tank serviced before continued use.

Battery System

Check the battery terminals for clean, tight connections. Loose or corroded connections have high electrical resistance which makes starting the generator more difficult. See maintaining Battery and Battery Connections.

Mechanical Systems

- Look for mechanical damage. Start the generator and check for unusual noises and vibrations. Check generator mounting bolts or welded connections to the RV chassis to confirm they are secure.
- Check the generator air inlet and outlet openings are not clogged with debris or otherwise blocking air flow into or out of the generator.

- Clean accumulated dust, dirt or other debris from the generator. Do not clean the generator while it is running or still hot. Protect the generator, air filter, control panel, and electrical components from water, soap or cleaning solvents.
- Do not use a power washer to clean the generator.

Checking Engine Oil Level

⚠WARNING

Crankcase pressure can expel hot engine oil out of the fill opening, causing severe burns. Never attempt to check the oil level with the generator running.

⚠CAUTION

Overfilling the engine with oil will increase the oil consumption and degrade engine performance. Keep the oil level within the cross hatched marks.

1. Park the RV on a flat level surface.
2. Unscrew the oil fill cap and wipe the oil off the dipstick. (Fig. 8) Screw the dipstick back in, remove it again and read the oil level on the cross hatched marks.
3. Add or drain the oil as needed. See Engine Oil Recommendation. Keep the oil level within the cross hatched marks.
4. After checking the oil level, make sure the oil cap is screwed on securely.

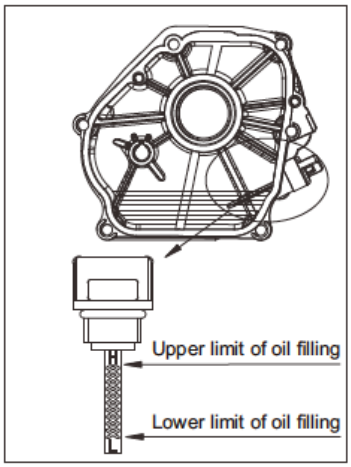

Fig. 8

Troubleshooting

⚠WARNING

Some generator service procedures present hazards that can result in severe personal injury or death. Only trained and experienced service personnel with the knowledge of fuels, electricity, and rotating machinery hazards should be allowed to perform generator service.

The status indicator lights on the control panel alert the owner to the status of the generator (Fig. 9).

1. The low oil LED will indicate the generator is low on oil. See Checking Engine Oil Level herein. If the generator doesn't start or continue to operate, check the status of the low oil level LED.
2. The Overload LED indicates an over current condition as well as general overload conditions. This light will illuminate briefly when the generator is starting. If there is an over current condition the generator will disconnect the electrical output but the engine will continue to operate. See Loading the generator and Resetting Overload.
3. The Output Ready LED indicates that the generator is ready to be used. The light may flash while the generator is starting and will stay on continuously while running.

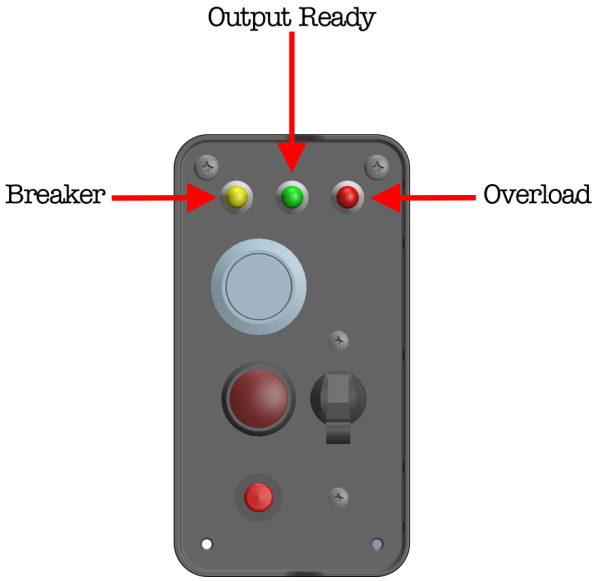

Fig. 9

Maintenance

Periodic maintenance is essential for top performance and long life of the generator. Use the Maintenance Schedule below as a guide for normal periodic maintenance. In hot or dusty environments some maintenance procedures should be performed more frequently, as indicated by the footnotes in the table. Keeping a log of maintenance performed and hours run will help ensure regular maintenance is performed. The VFT display on the front of the generator digitally tracks and displays the number of hours of operation.

Resources and Tools Required

- Air filter
- Fuel filter (if running gasoline through the generator)
- Spark plug (See Spark Plug Chart Reference Chart below)
- Pliers to remove fuel filter
- Spark plug socket
- Socket wrench
- Socket for oil plug
- Socket for spark arrestor

More Service Information

To receive service and parts information, contact RVMP Customer Service at (855) HAPPYRV or email at support@rvmp.co. Also check the website for manuals and instructions: https://rvmp.co/manuals.

Maintenance Schedule

Maintenance Schedule							
Maintenance Procedure	Every day or every 8 hours	After first 25 hours	Every month	Every 50 hours	Every 100–150 hours	Every 250 hours	Every 450 hours
General inspections	x						
Check engine oil level	x						
Clean and check battery			x				
Clean spark arrestor						x	
Change engine oil		x			x		
Check and clean foam air filter				x			
Replace foam air filter						x	
Replace spark plug							x

1. As a part of engine break–in, change the engine oil after the first 25 hours of operation.
2. Change oil and foam air filter more often when operating in dusty or hot environments.
3. Check battery connections and change oil more often when operating in hot weather.
4. Change spark plug sooner if engine performance deteriorates.
5. Change oil **at least** once a year.

Fuel Recommendations

⚠WARNING

Gasoline and LP are highly flammable and explosive and can cause severe personal injury or death. Do not smoke or turn on electrical switches ON or OFF where fuel fumes, tanks or equipment are present or in areas sharing ventilation. Keep flames, sparks, pilot lights, arc producing equipment, switches and all other sources of ignition from exposure to fuel sources. Keep an ABC fire extinguisher within reach when servicing the fuel system.

⚠CAUTION

Do not use gasoline or gasoline additives containing methanol because methanol can be corrosive to the fuel system components. Avoid using highly leaded gasolines and lead additives because extra engine maintenance may be required.

Gasoline

Use clean, fresh unleaded gasoline having a minimum octane rating of 87. Leaded gasoline may be used, if allowed by law, but will result in the extra maintenance to clean combustion chamber components. Do not use gasoline or gasoline additives (de-icers) containing methanol due to its corrosive nature. Always use fuel stabilizer if the generator will be idle for more than 120 days. Regular use of fuel stabilizer or fuel preservative and/or carburetor cleaner are critically important to keeping the engine running smoothly for years. Old gasoline left in the generator will gum up the carburetor and require extra maintenance.

Propane (LP)

Use clean, fresh HD-5 grade liquefied petroleum gas (LP) or equivalent product consisting of at least 90% propane. Commercial LP fuels may contain more than 2.5% butane, which can result in poor fuel vaporization and engine performance in ambient temperatures below 32 degrees Fahrenheit. Use a low-pressure LP regulator. Use of a high-pressure LP regulator can damage the generator.

Engine Oil Recommendations

Use API (American Petroleum Institute) performance class SJ engine oil or better. Also look for the SAE (Society of Automotive Engineers) viscosity grade. Referring to Fig. 11 below, choose the viscosity grade appropriate for the ambient temperatures expected until the next scheduled oil change. Single-grade SAE 30 oil is preferable when temperatures are consistently above freezing. Multi-grade oils are better when wide temperature variations are expected.

Note: Maintenance schedule must be followed even when using synthetic oils.

Expected Ambient Temperatures	SAE Viscosity Grade
32° F (0° C) and higher	30
0° to 32° F (-17° to 0° C)	10W-30
-25° to 0° F (-31° to -17° C)	0W-30

Fig. 11

Starting Batteries

A minimum battery rating is 450 CCA (cold cranking amps) at 0 degrees Fahrenheit for both gasoline and LP.

Exercising The Generator

Exercise the generator at least two hours each month if used infrequently. Run the generator at approximately half rated power, about 23.3 Amps. See Loading the generator above. A single two hour exercise period is better than several shorter periods.

Exercising the generator drives off moisture trapped in the engine crankcase and lubricates the engine, replaces stale fuel in the fuel lines and carburetor as well as removes oxides from electrical contacts. The result is better starting performance, more reliable operation and longer engine life.

Storing The Generator

Proper storage is essential for preserving top generator performance and reliability when the generator cannot be exercised regularly and will be idle for more than 120 days.

If Running Gasoline in the Generator

1. Fill the fuel tank with fresh gasoline and add a fuel preservative (stabilizer) based on the number of gallons in the tank. For the proper amount to add simply follow the instructions on the container label. Unless a fuel preservative (stabilizer) is added the gasoline in the fuel system will begin to deteriorate and cause fuel system corrosion, gum formation and varnish-like deposits which can lead to difficulty starting and general rough operation.
2. Run the generator for about 10-20 minutes at about half load, ensuring that the gasoline with fuel preservative is pulled through the entire generator, fuel lines, and carburetor. Stop the generator.
3. Remove the air filter cover from the air filter housing, remove the air filter, and restart the generator.
4. Stop the flow of gasoline to the generator by either A: installing a gasoline shut off valve just outside the generator or B: pinch the gasoline line just outside of the generator with a pinch off lock tool or fuel line clamp tool specifically for tubing, being careful not to damage the fuel line tubing.
5. Start the generator. While the generator is still running but beginning to sputter from lack of fuel, spray an engine fogger (ex. Sea Foam or similar) intended for small engines, through the air filter housing and directly into the carburetor, following the manufacturer's instructions. Allow the generator to run until it stops naturally from lack of fuel.
6. Spray more engine fogger into the carburetor. Replace the air filter and cover.
7. Disconnect all appliances, push the AC output circuit breaker(s) on the front control panel to OFF and stop the generator.
8. Disconnect the battery cables (negative cable first) from the starting battery and store the battery according to the battery manufacturer's recommendations. See Maintaining the Battery and Connections.
9. Plug the exhaust tail pipe to keep out dirt, moisture, insects or small animals.

Note: Adding more fuel preservative than the manufacturer's recommendation may phase separate from the gasoline and occlude the small passages inside the carburetor and is not recommended.

⚠WARNING

Do not open the carburetor bowl drain when the engine is hot. Close the drain immediately after draining. Failure to heed this warning can lead to fire resulting in severe personal injury or death.

10. If there is any gasoline left in the carburetor, drain the carburetor bowl (Fig. 12) to prevent deposits of gum from clogging the small passages in the carburetor as the gasoline in the carburetor evaporates during storage. Drain the carburetor bowl as follows:
    A. Let the engine cool down thoroughly.
    B. Place a container under the drain to capture the fuel.
    C. Open the drain valve by turning the screw counter-clockwise with a screwdriver.
    D. After draining the carburetor, close the drain valve by turning the screw clockwise with a screwdriver until snug, do not over tighten the screw.

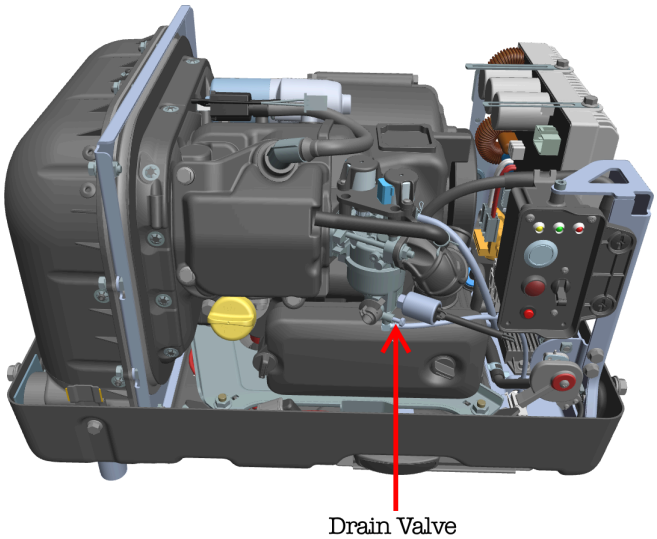

Fig. 12

If Running Propane (LP) Only in the Generator

Check the local ordinances to determine if the RV may be placed in a garage. Generally, ordinances require that LP systems be leak free, that the LP container not be filled beyond specified limits, that the LP container shutoff valve be closed, and the RV not be parked near sources of heat or ignition.

1. Remove the air filter cover from the air filter housing and remove the air filter.
2. Start the generator. While the generator is running, spray an engine fogger (ex. Sea Foam or similar) intended for small engines, through the air filter housing and directly into the carburetor, following the manufacturer's instructions.
3. Stop the generator.
4. Spray more engine fogger into the carburetor.
5. Replace the air filter and cover.
6. Disconnect all appliances, push the AC output circuit breaker(s) on the front control panel to OFF and stop the generator.
7. Disconnect the battery cables (negative cable first) from the starting battery and store the battery according to the battery manufacturer's recommendations. See Maintaining the Battery and Connections.
8. Plug the exhaust tail pipe to keep out dirt, moisture, insects or small animals.
9. Close the fuel supply valve if so equipped.

⚠WARNING

LP leaks can lead to explosive accumulation in service pits, sumps or other below grade locations. Comply with all local ordinances regarding the indoor storage of RV's with LP engine fuel systems.

Returning the Generator to Service

1. Remove fuel line clamp or open fuel shutoff valve (if used).
2. Reconnect the starting battery (negative cable last). See Maintaining Battery and Battery Connections.
3. Remove the plug (if used) from the exhaust tail pipe.
4. Open the fuel supply valve (if equipped).
5. Inspect the generator. See Conducting General Inspections.
6. Start the generator. There may be smoke and rough operation for a few minutes until the engine fogger burns off. If the engine doesn't start, clean or replace the spark plug, which may have been fouled by the fogger.
7. Push the AC power circuit breaker(s) on the front control panel to the "ON" position when the generator is ready to power appliances.

Cleaning the Air Filter Element

In dusty environments, the air filter should be inspected and cleaned more frequently. To clean the air filter, refer to Fig. 13.

1. Remove the engine service access door.
2. Remove the air filter cover and the foam air filter from the air cleaner housing.
3. Wash the foam air filter in a solution of household detergent soap and warm water, slowly squeeze the foam element to remove dirt and oil accumulation.
4. Rinse in clean water.
5. Dispose of used soapy water solution properly.
6. Dry the air filter element.
7. Check to ensure that the metal backfire deflector plate is properly installed on the air cleaner housing and did not fall out during removal of the filter.
8. Return the air filter to the air filter housing.
9. Install air filter cover making sure the knob locks in place.
10. Reinstall engine service access door securely.

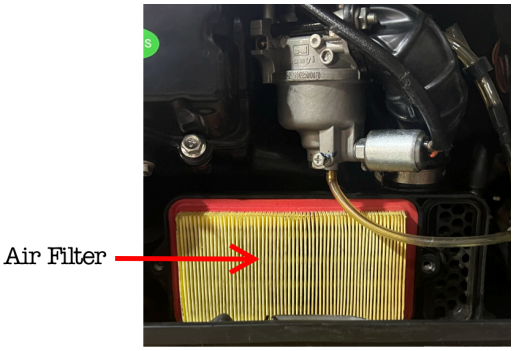

Fig. 13

Changing the Engine Oil

⚠WARNING

State and federal agencies have determined that contact with used engine oil can cause cancer or reproductive toxicity. Try to avoid skin contact and breathing of vapors. Use rubber gloves and wash exposed skin.

⚠WARNING

Crankcase pressure can expel hot engine oil out of the fill opening causing severe burns. Always stop the engine before removing the oil fill cap.

1. Park the RV on a flat level surface.
2. Run the engine until just warm, then stop the engine, remove the negative battery cable, then remove the oil fill cap.
3. Remove the oil drain hole cover, (Fig. 14) from the bottom of the generator, place a proper container under the oil drain hole and unscrew the drain plug. Wear leather gloves and use a long extension bar to prevent contact with hot engine oil.
4. Allow all engine oil to drain from the engine and reinstall the drain plug. Be sure to clean off the threads on the drain plug before reinstalling into the oil sump. Tighten the plug firmly but do not overtighten.
5. Refill the oil with 1.7 quarts (1.6 liters) of engine oil. See Engine Oil Recommendations.
6. Replace the engine oil fill cap and tighten securely.
7. Check that the engine oil drain plug is not leaking and has been secured in the oil sump.
8. Replace the engine oil drain cover back into the generator.
9. Properly dispose of the used engine oil per local ordinances.

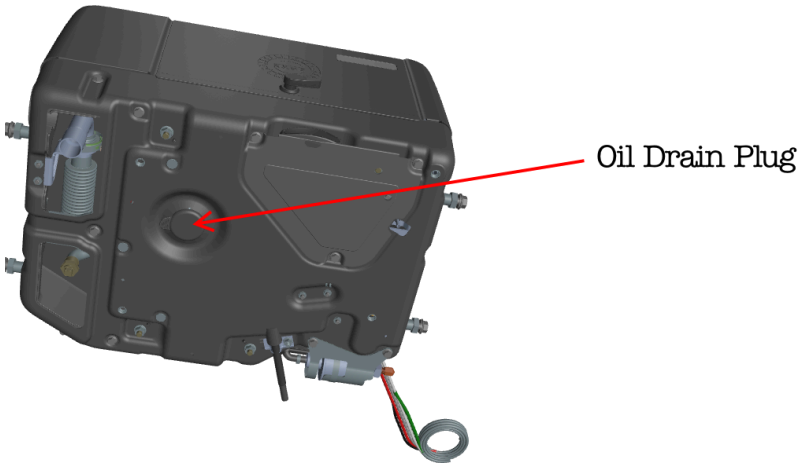

Fig. 14

Maintaining the Battery and Battery Connections

⚠WARNING

Arcing at the battery terminals, light switches, or other equipment as well as flames or sparks can ignite battery gas causing severe personal injury. Ventilate the battery area before working on or near the battery. Wear safety glasses. Do not smoke. Switch the trouble light ON or OFF away from the battery. Do not disconnect the battery cables while the generator is running or when the vehicle battery charging system is on. Always disconnect the negative cable first and reconnect it last.

Have the battery charging system serviced if the DC system voltage is consistently low or high.

1. Keep the battery case and terminals clean and dry and the terminals tight.
2. Remove battery cables with a battery terminal puller.
3. Make sure which terminal is positive and which is negative before making battery connections. Cross wiring the battery terminals will result in severe damage to the generator and RV. To reduce arcing, always remove the negative battery cable first.
4. Apply battery grease to the battery terminals before securing the generator cables.

Replacing the Spark Plug

The generator has one spark plug, which must be in good condition for proper engine starting and performance. A spark plug that fouls frequently or has heavy soot deposits indicates the need for engine service. See Trouble Shooting section.

Follow these procedures to change the spark plug:

1. If the generator is running, stop it and let it cool down for several minutes.
2. Remove the service access door.
3. Remove the spark plug boot (Fig. 15) by firmly pulling up and away from the engine.
4. Using a spark plug wrench, remove the spark plug from the cylinder head.
5. Place a clean rag over the spark plug opening to prevent dirt from entering the engine.
6. Inspect the spark plug for:
    a. Cracking of the insulator.
    b. Excessive wear on the electrode.
    c. Spark plug gap of 0.0236 mm – 0.0315 mm (0.60mm – 0.80mm)
7. If the spark plug fails to meet any of the above conditions, replace the spark plug. See Fig. 16 for approved replacement spark plugs.
8. Install a new or reinstall the old spark plug into the cylinder head by the following procedures:
    a. Carefully insert the spark plug into the cylinder head. Thread the spark plug by hand until it seats.
    b. Using a spark plug wrench, tighten the spark plug firmly to ensure it is fully seated.
    c. Replace the spark plug boot, ensuring the boot fully engages the spark plug terminal.
    d. Replace the service access door.

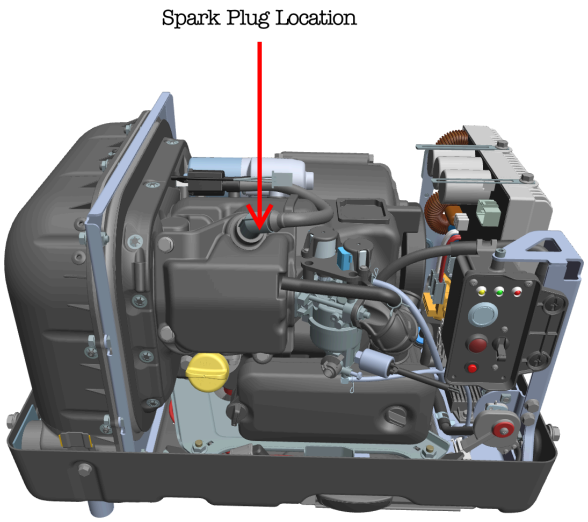

Fig. 15

Replacement Spark Plug Chart			
Torch	Champion	Bosch	Autolite
F6RTC	RN9YC	WR7DS	3923

Fig. 16

Cleaning the Spark Arrestor

Cleaning the spark arrestor is required for maximum generator performance. The muffler is mounted inside the generator housing. The cleanout plugs are located on the bottom side of the muffler, accessible through the air outlet open in the bottom of the generator.

WARNING

A hot muffler can cause severe burns, let the muffler cool down before removing or installing the cleanout plugs.

Please refer to Figure 17 below when cleaning out the spark arrestor muffler.

1. Remove the cleanout plugs from the bottom of the muffler.
2. Restart the generator and load it to near full power. Let the generator run for about five minutes to expel the soot deposits inside the muffler.
3. Stop the generator, allow the muffler to cool, then reinstall the cleanout plugs.

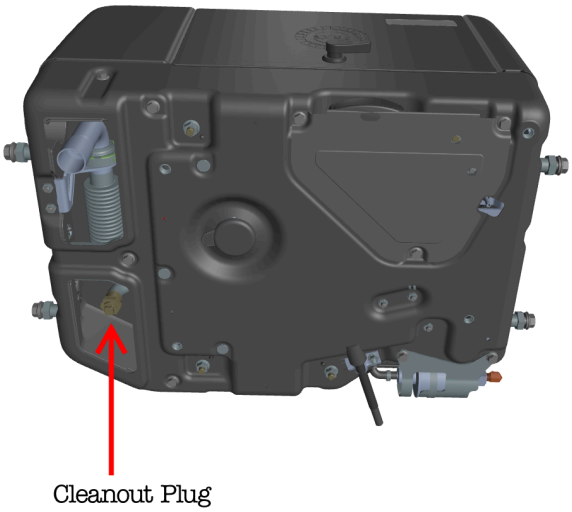

Fig. 17

Product Warranty Registration

Please visit rvmp.co for complete details on product registration and warranty. You may submit your product **registration online** (next page) or by completing the form below and mailing it to:

RVMP
Attn: Product Registration
830 Kinnear Rd,
Columbus, OH 43212

Your Full Name: _____

Your Email Address: _____

Your Phone Number: _____

Your Address: _____
Address

_____
Address line 2

_____ _____ _____
City State Zip

Product Name: _____

Product Model: _____

Serial Number: _____

Date of purchase: _____

GIVING YOU THE COMFORTS OF HOME WHEREVER THE ROAD TAKES YOU™

RV MOBILE POWER, LLC

830 Kinnear Rd, Columbus, OH 43212

(855) HAPPYRV www.rvmp.co support@rvmp.co

Visit rvmp.co • Copyright© 2024 RV Mobile Power, LLC. – All Rights Reserved.